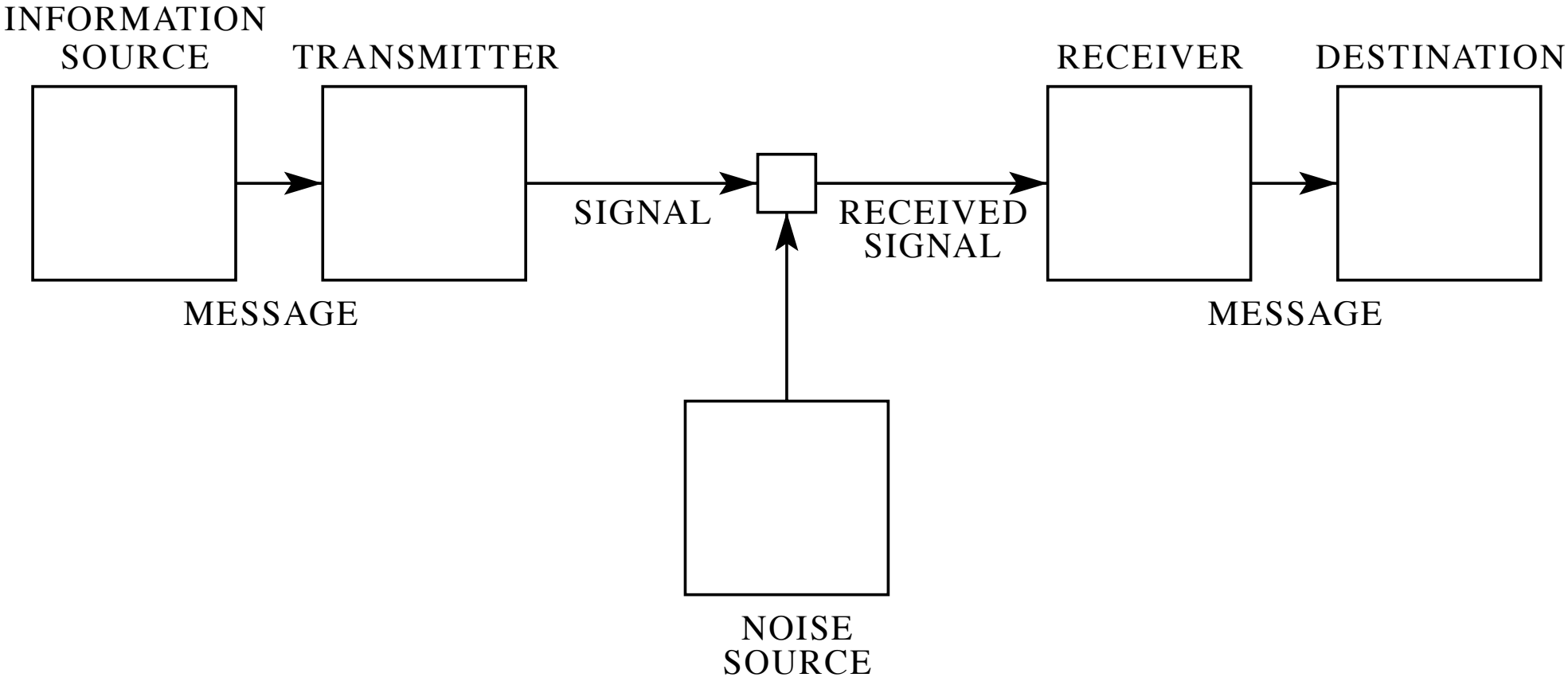
INFORMATION SOURCE
TRANSMITTER
RECEIVER
DESTINATION
SIGNAL
RECEIVED SIGNAL
MESSAGE
MESSAGE
NOISE SOURCE